REV	DATE	ECO	DESCRIPTION
200-0041-901 C	8/17/2003	-	Production Release
Production Release	11/07/2003	-	USB Update
TI 2506026 A	8/12/2004	2049119	Change to TI drawing number. Schematic Correction : J4 pin 82 connection; U10 pins 84&85 connections
TI 2506026 B	9/14/2004	2050314	Schematic Correction : Offpage references - USB_JTAG_TDI, USBCPLD_JTAG_TDI. Added U12, U14 note.
TI 2506026 C	10/13/2004	2051254	Schematic Correction : Added information for HSI only design.
TI 2506026 D	3/29/2005	2056862	Schematic Correction : Improved block diagram, U1 pin 99 connection, merged pages 5&6, merged pages 9&13.
TI 2506026 E	7/15/2005	2060008	Schematic Correction - added alternate design note on page 5 and 6.

MH1 HOLE
MH2 HOLE
MH3 HOLE
MH4 HOLE
MH5 HOLE
MH6 HOLE
M1 Pich-N-place
M2 Pich-N-place
M3 Pich-N-place
M4 Pich-N-place
M5 Pich-N-place
M6 Pich-N-place

NOTES:

1. All electrolytic capacitors will be 10V (B size) unless specified otherwise.
2. All ceramic capacitors will be 50 volt (0603 size) unless specified otherwise.
3. All resistors will be 0603 size unless specified otherwise.
4. All 0.1UF bypass capacitors as close to pins as possible.
5. All TP's test points are pads on board with vias.
6. Not installed at the factory:
C12,C13,C57,C73,C74,D4,L3,R5,R47,R48,R57,R58,R76,R83-R85,R99,R100,R107

Texas Instruments, Inc.
Post Office Box 655303
Dallas, Texas 75265
www.ti.com

TITLE:

Schematic, Discovery 1100 (DDC1100)

Size	DWG NO	REV
C	2506026	E

DATE	Sheet
Wednesday, July 20, 2005	1 of 10

May not be reproduced without permission from Texas Instruments Incorporated.
Copyright 2004 Texas Instruments Incorporated.

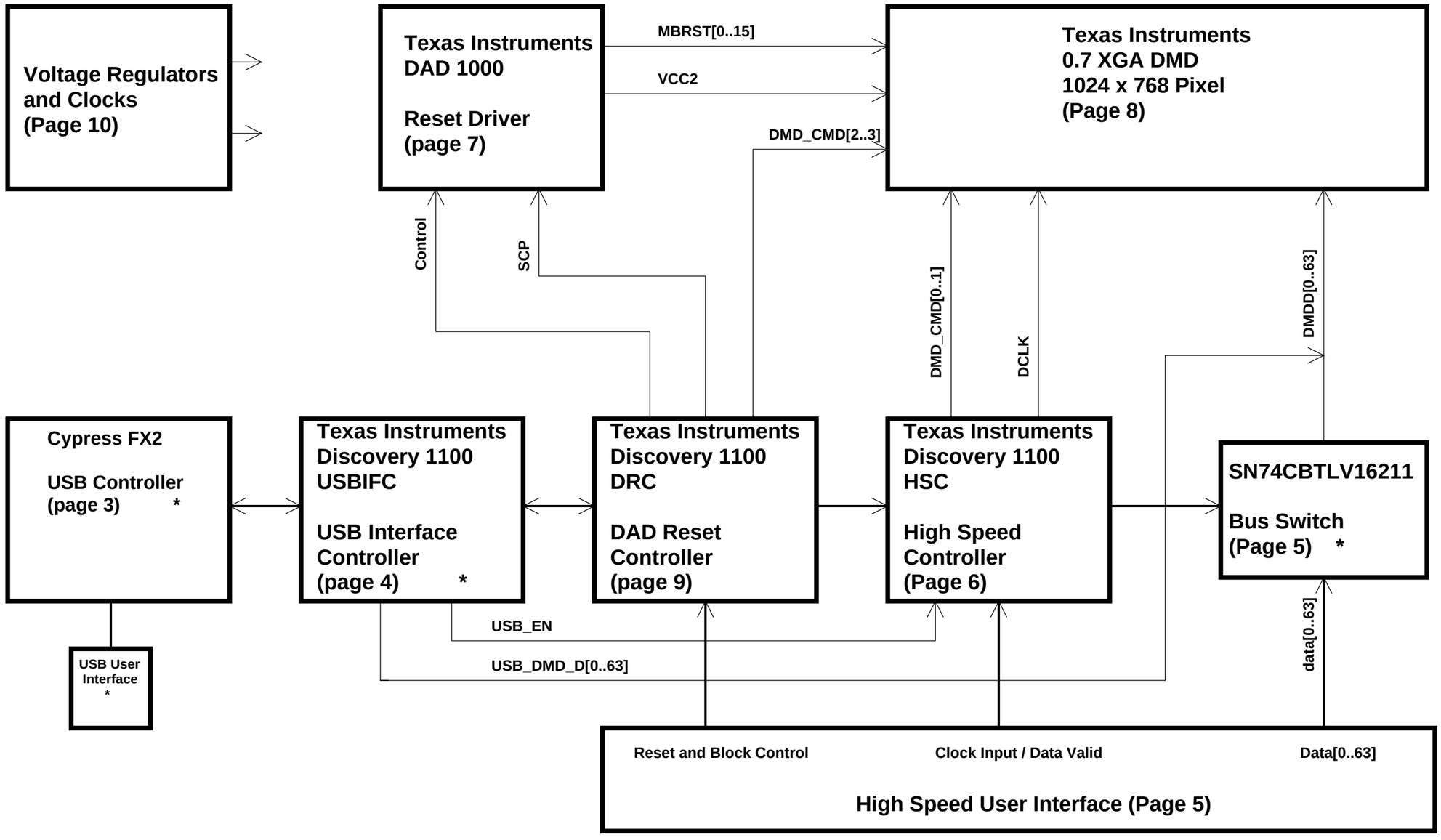

Block Diagram

* HSI Only Design:
Remove components if
USB interface is not required.

May not be reproduced without permission from Texas Instruments Incorporated.
Copyright 2004 Texas Instruments Incorporated.

Texas Instruments, Inc.
Post Office Box 655303
Dallas, Texas 75265
www.ti.com

Title		
Schematic, Discovery 1100		
Size C	DWG NO 2506026	Rev E
Date: Tuesday, March 29, 2005	Sheet 2 of 10	

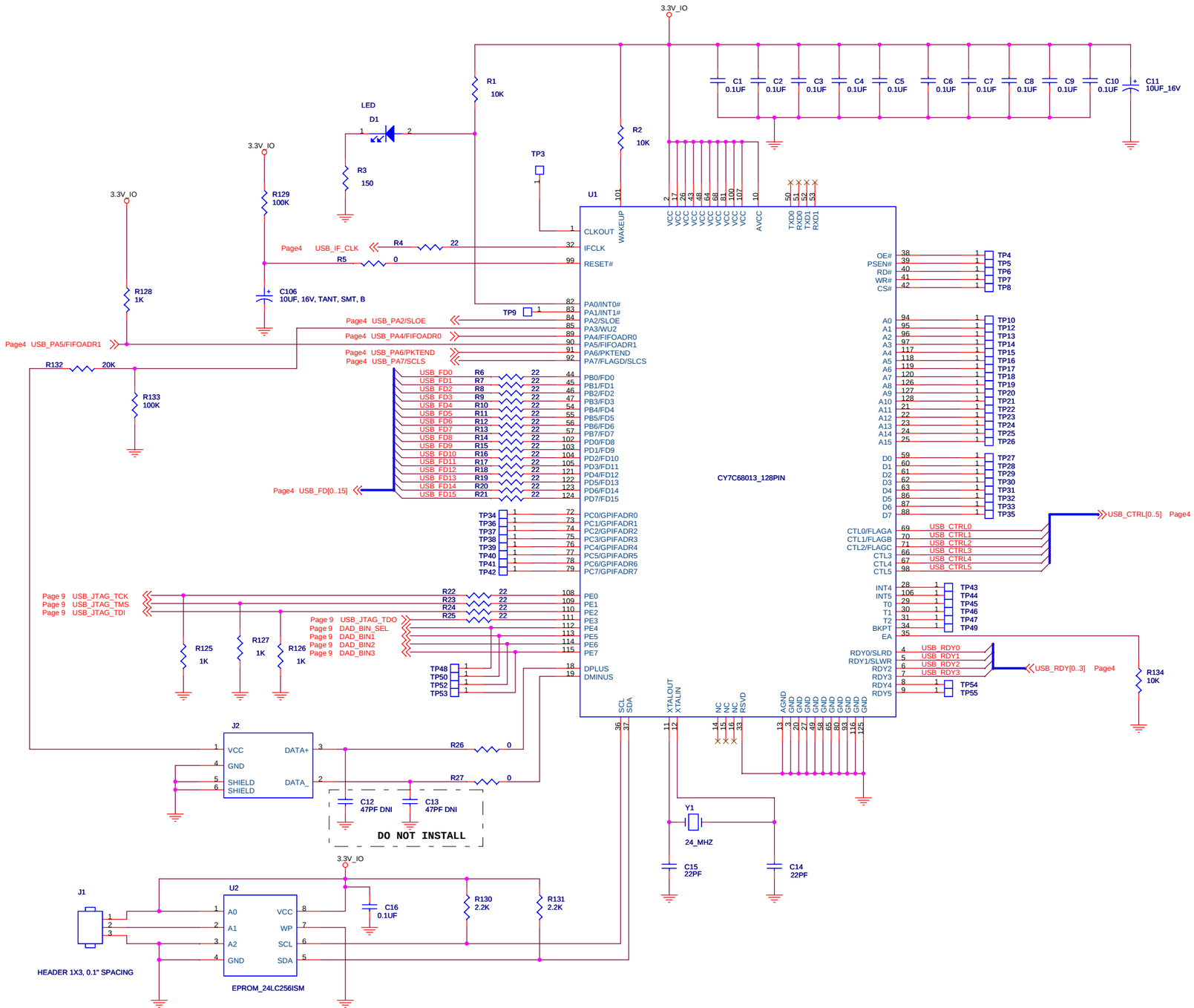

J1 JUMPER SETTINGS:
JUMPER 1-2 FOR PROGRAMMING FIRMWARE
JUMPER 2-3 FOR BOOTUP MODE

HSI Only Design:
All components on this page may be removed if USB interface is not required.

May not be reproduced without permission from Texas Instruments Incorporated.
Copyright 2004 Texas Instruments Incorporated.

USB INTERFACE

Texas Instruments, Inc.
Post Office Box 655303
Dallas, Texas 75265
www.ti.com

Title: **Schematic, Discovery 1100**

Size	DWG NO	Rev
C	2506026	E

Date: Wednesday, March 30, 2005 Sheet 3 of 10

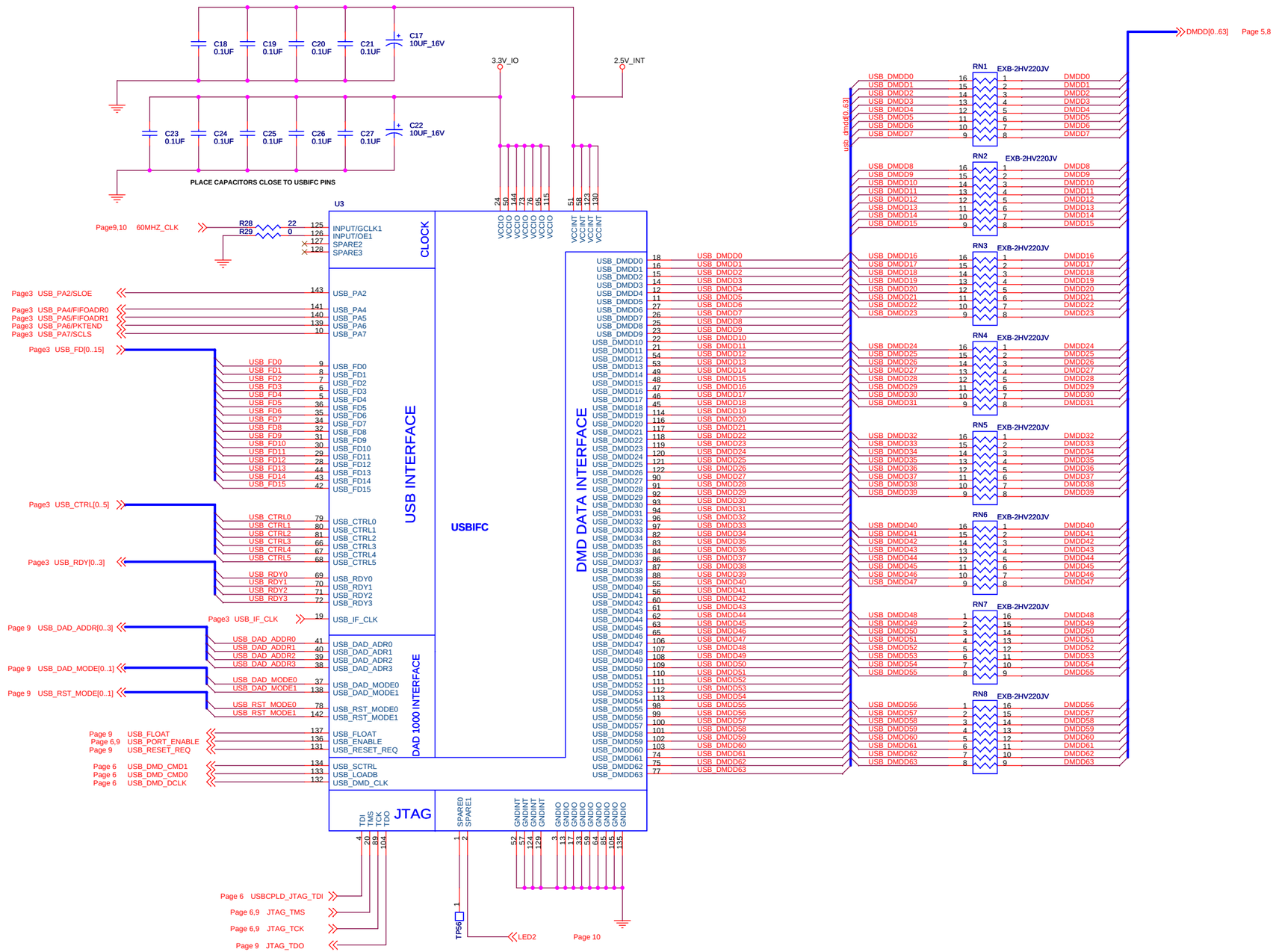

HSI Only Design:
All components on this page may be removed if USB interface is not required.

USB INTERFACE CONTROLLER

Texas Instruments, Inc.
Post Office Box 655303
Dallas, Texas 75265
www.ti.com

Title: **Schematic, Discovery 1100**

Size	DWG NO	Rev
C	2506026	E

Date: Wednesday, March 30, 2005 Sheet 4 of 10

May not be reproduced without permission from Texas Instruments Incorporated.
Copyright 2004 Texas Instruments Incorporated.

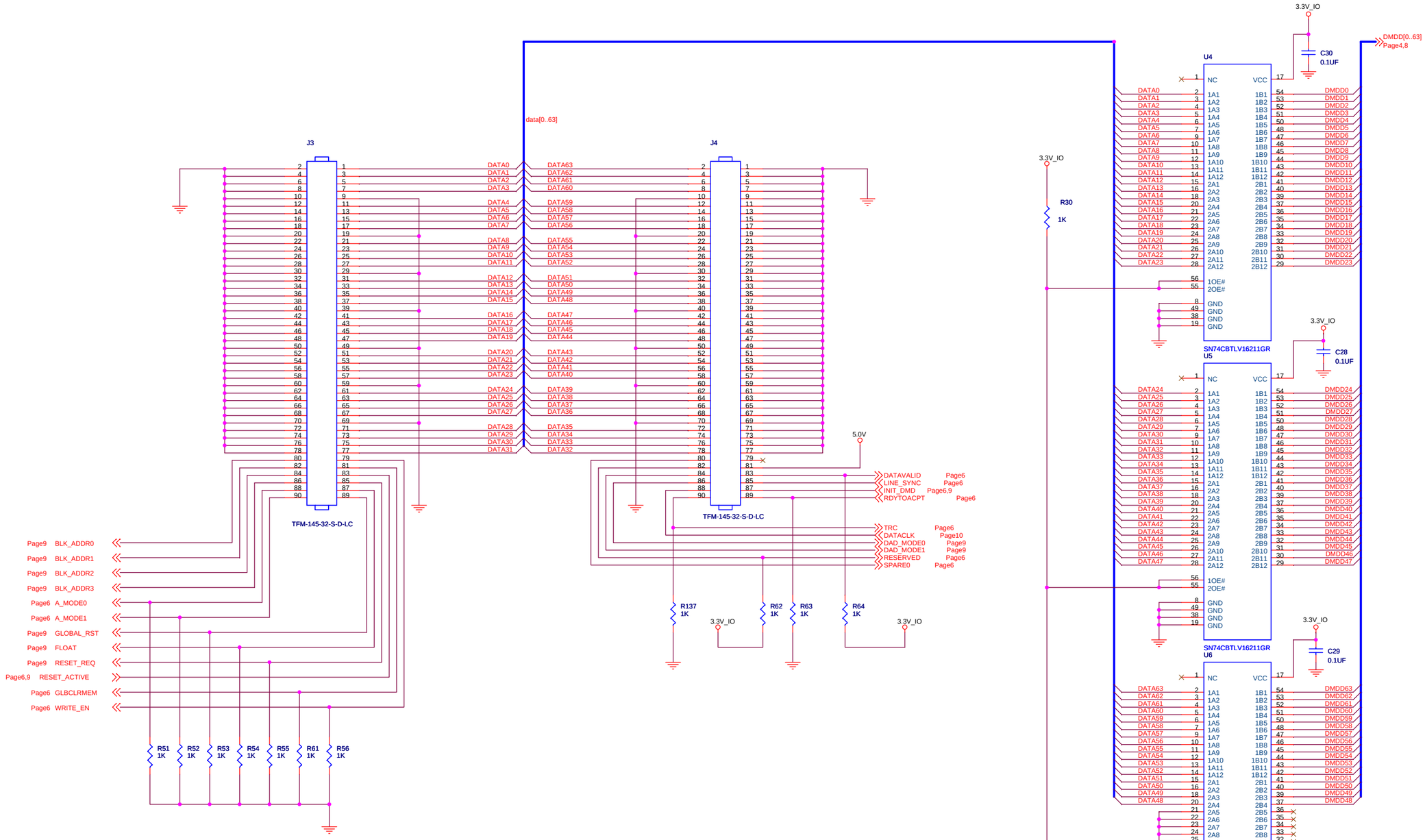

Alternate Design:
J4 pin 79 connected to U7 pin 31. This connection is not used.

HSI Only Design:
Components U4, U5 and U6 may be removed if USB interface is not required.
If the components are removed, connect DATA[0..63] to DMDD[0..63].

May not be reproduced without permission from Texas Instruments Incorporated.
Copyright 2004 Texas Instruments Incorporated.

HIGH SPEED INTERFACE

Texas Instruments, Inc.
Post Office Box 655303
Dallas, Texas 75265
www.ti.com

Title: **Schematic, Discovery 1100**

Size	DWG NO	Rev
C	2506026	E

Date: Wednesday, July 20, 2005 Sheet 5 of 10

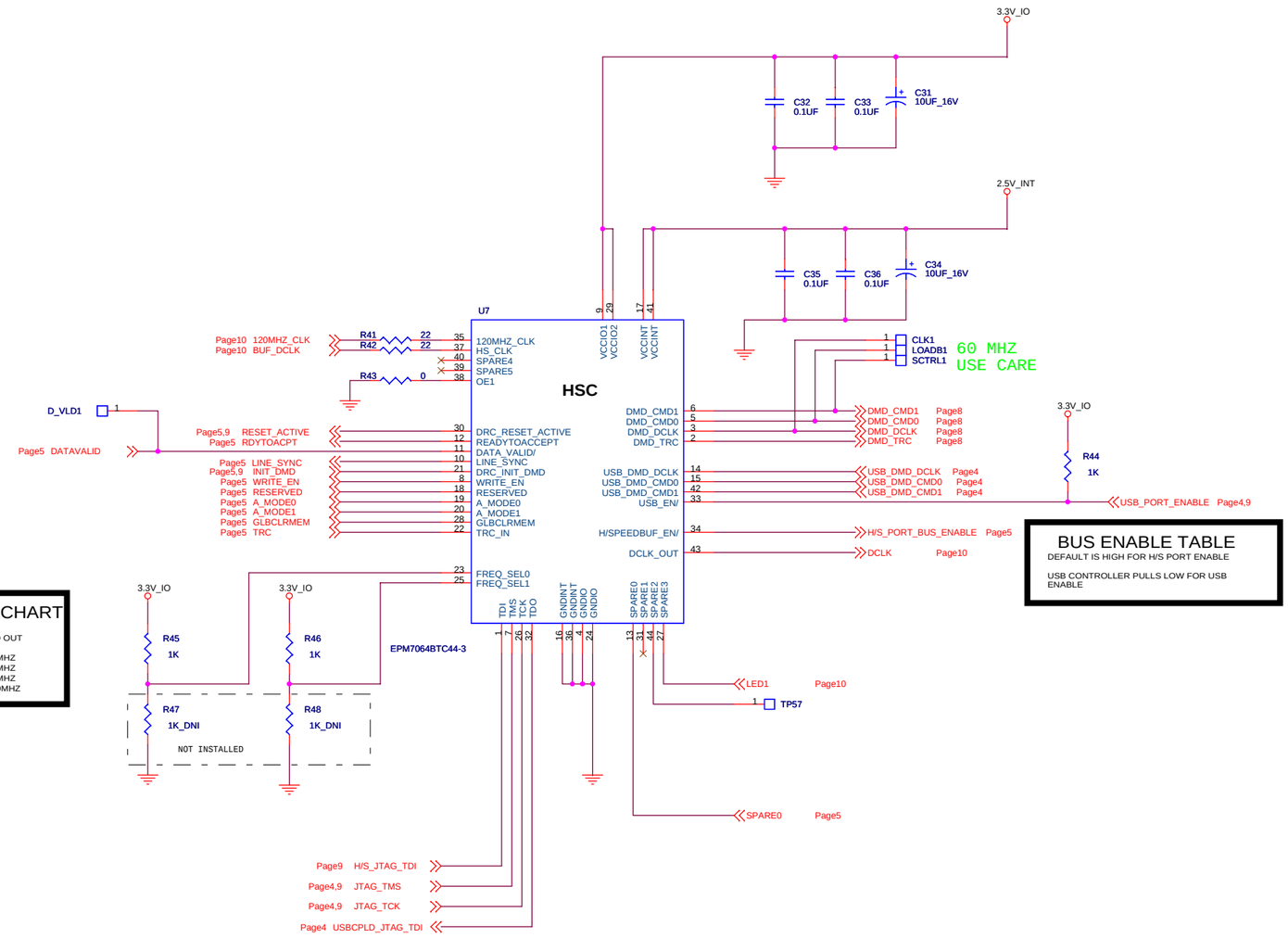

FREQUENCY SELECT CHART

FREQ SEL 1	FREQ SEL 0	FREQ OUT
0	0	15MHZ
0	1	30MHZ
1	0	60MHZ
1	1	120MHZ

BUS ENABLE TABLE

DEFAULT IS HIGH FOR H/S PORT ENABLE

USB CONTROLLER PULLS LOW FOR USB ENABLE

Alternate Design : U7 pin 31 connected to J4 pin 79.

*** HSI Only Design: Connect U7 pin 32 to U21 pin 1.**

HIGH SPEED CONTROLLER

Texas Instruments, Inc.
Post Office Box 655303
Dallas, Texas 75265
www.ti.com

Title: **Schematic, Discovery 1100**

Size: C | DWG NO: 2506026 | Rev: E

Date: Wednesday, March 30, 2005 | Sheet 6 of 10

May not be reproduced without permission from Texas Instruments Incorporated.
Copyright 2004 Texas Instruments Incorporated.

NOTE: PLACE ALL BYPASS CAPS AS CLOSE TO PINS AS POSSIBLE.

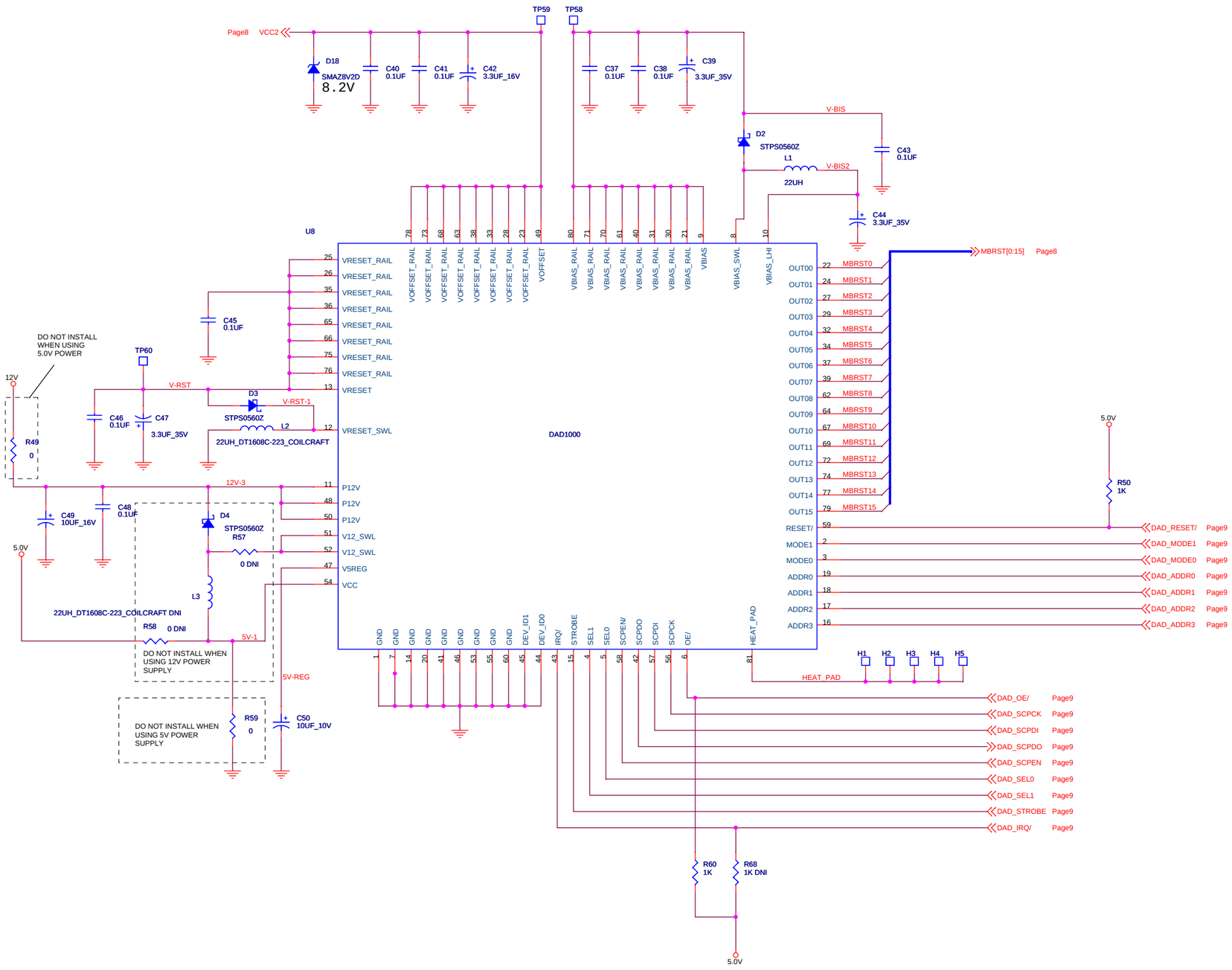

DAD1000 RESET DRIVER

Texas Instruments, Inc.
Post Office Box 655303
Dallas, Texas 75265
www.ti.com

Title: **Schematic, Discovery 1100**

Size: C | DWG NO: 2506026 | Rev: E

Date: Wednesday, March 30, 2005 | Sheet 7 of 10

May not be reproduced without permission from Texas Instruments Incorporated.
Copyright 2004 Texas Instruments Incorporated.

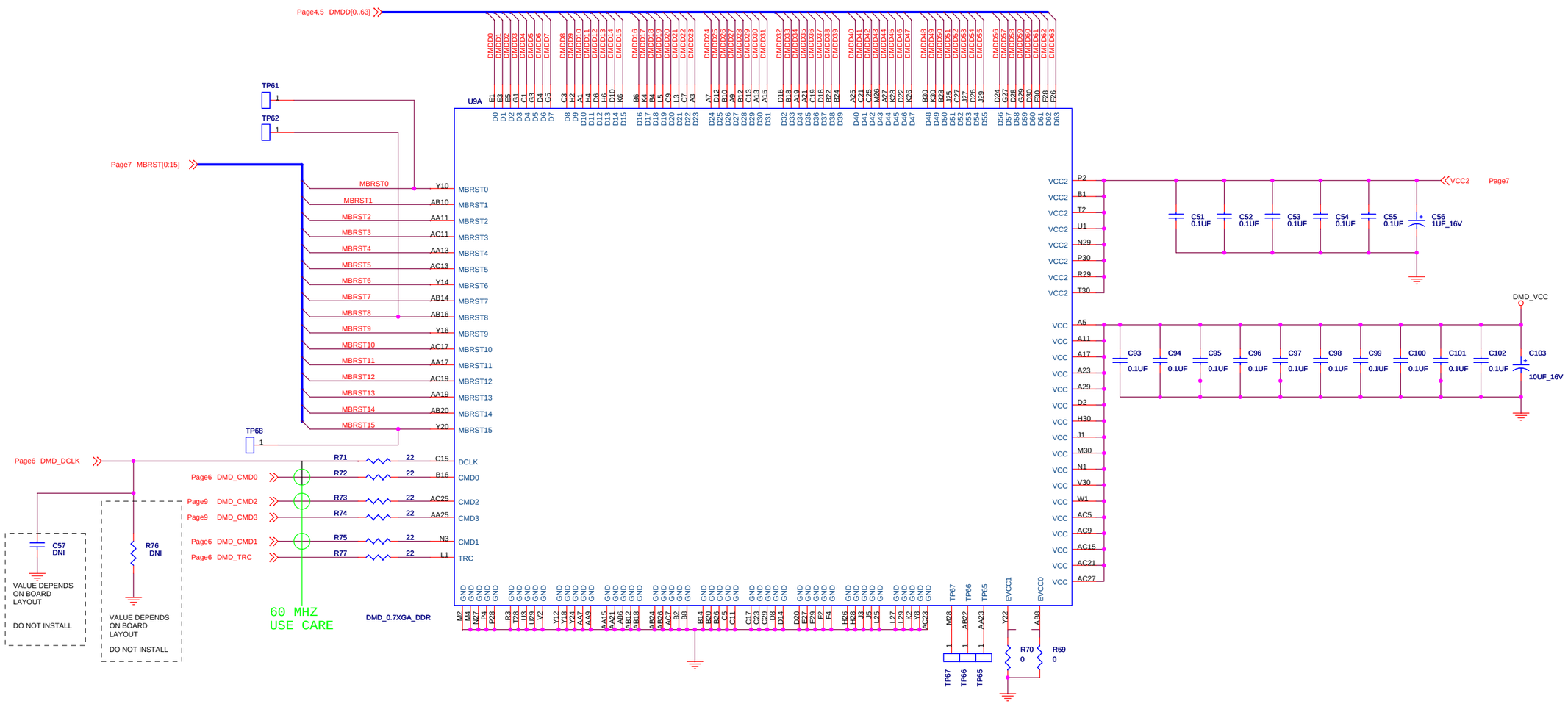

May not be reproduced without permission from Texas Instruments Incorporated.
Copyright 2004 Texas Instruments Incorporated.

DMD 0.7XGA

Texas Instruments, Inc.
Post Office Box 655303
Dallas, Texas 75265
www.ti.com

Title: **Schematic, Discovery 1100**

Size	DWG NO	Rev
C	2506026	E

Date: Wednesday, March 30, 2005 Sheet 8 of 10

* HSI Only Design:
Remove U22.
Connect J5 pin 1 to U10 pin 62 and U7 pin 26.
Connect J5 pin 5 to U10 pin 15 and U7 pin 7.
Connect J5 pin 9 to U10 pin 4.
Connect U21 pin 1 to U7 pin 32.

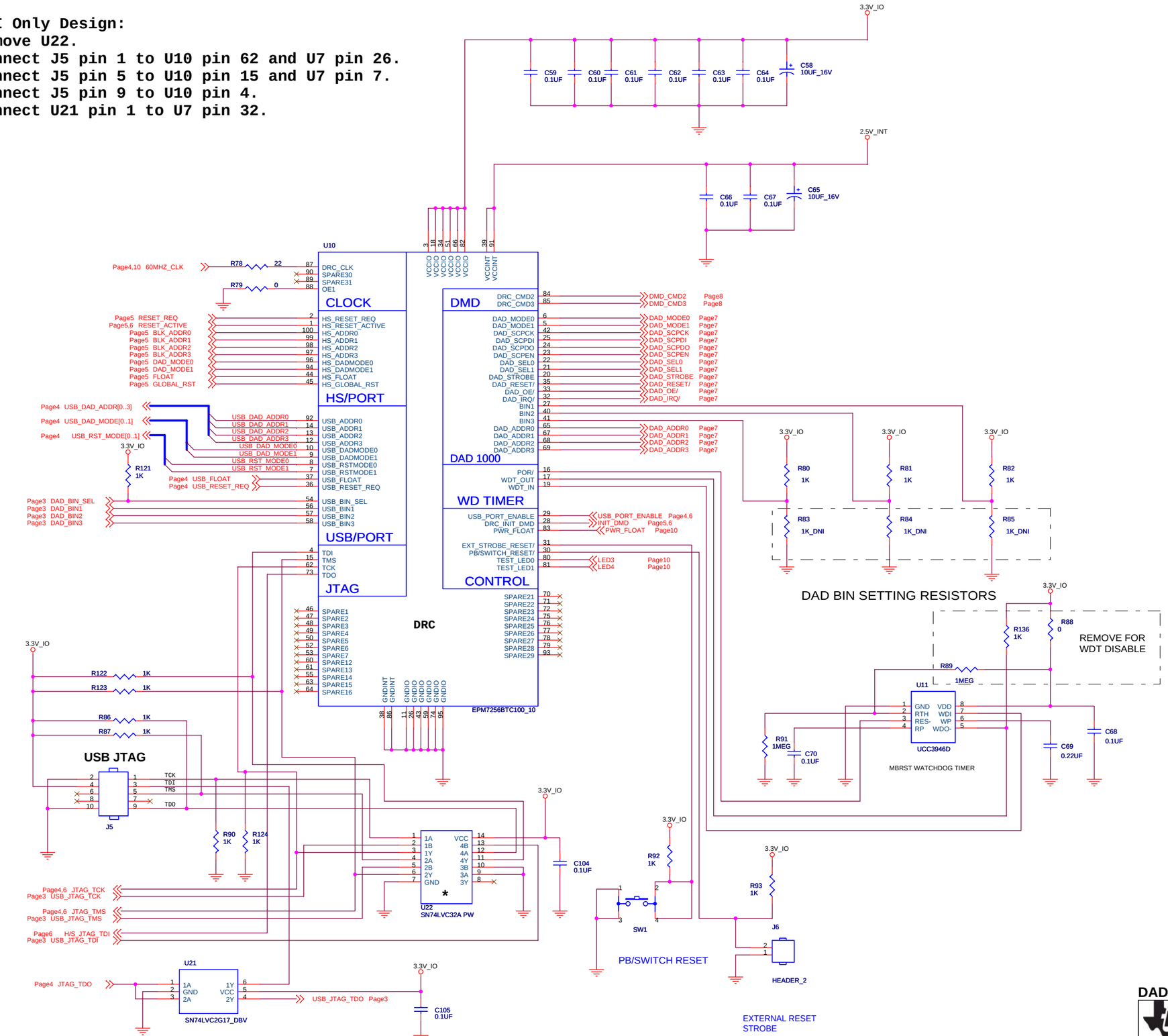

DAD RESET CONTROLLER

Texas Instruments, Inc.
Post Office Box 655303
Dallas, Texas 75265
www.ti.com

Title: **Schematic, Discovery 1100**

Size: C | DWG NO: 2506026 | Rev: E

Date: Wednesday, March 30, 2005 | Sheet 9 of 10

May not be reproduced without permission from Texas Instruments Incorporated.
Copyright 2004 Texas Instruments Incorporated.

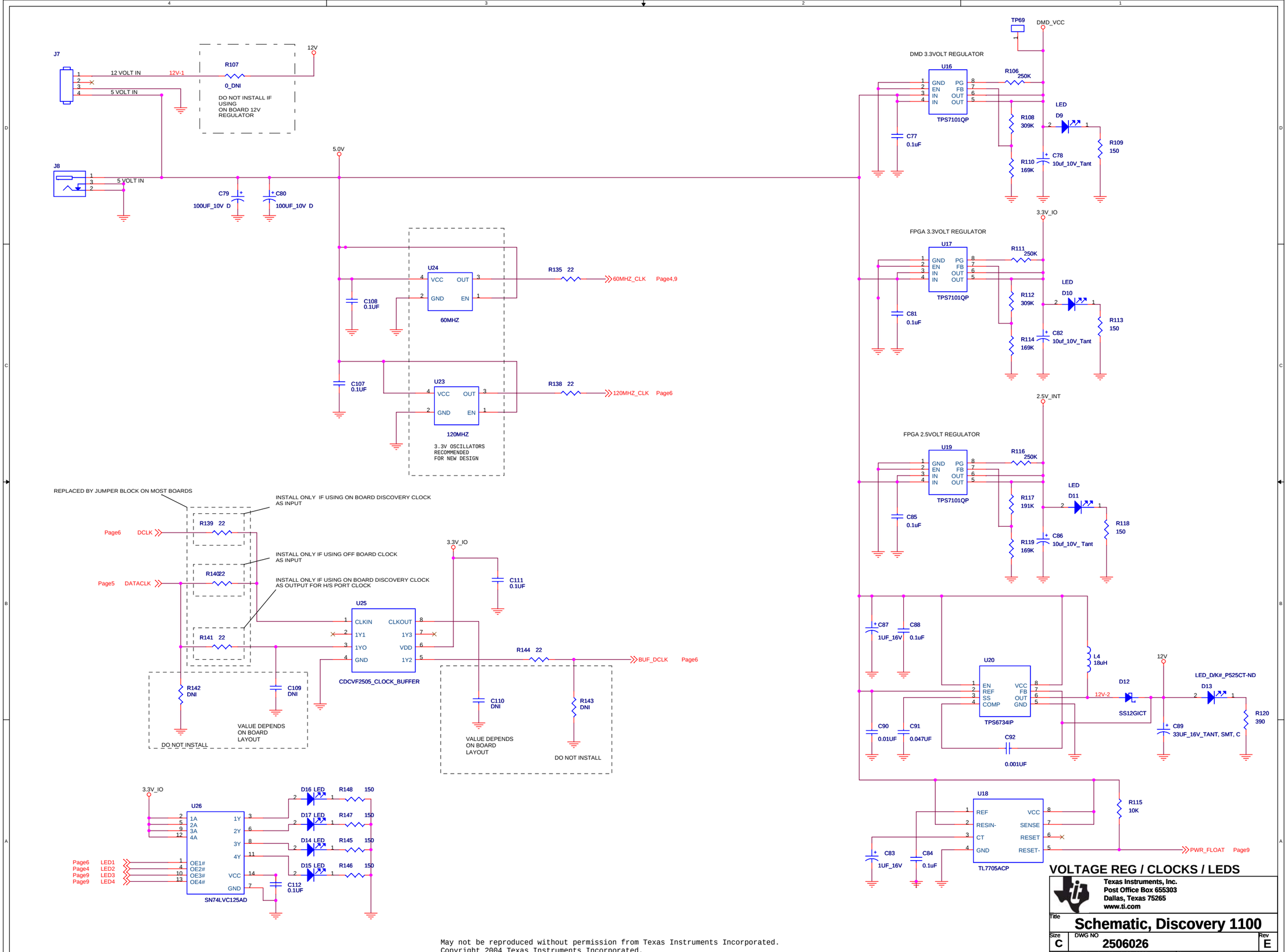

VOLTAGE REG / CLOCKS / LEDS

Texas Instruments, Inc.
Post Office Box 655303
Dallas, Texas 75265
www.ti.com

Title: **Schematic, Discovery 1100**

Size	DWG NO	Rev
C	2506026	E

Date: Wednesday, March 30, 2005 Sheet 10 of 10

May not be reproduced without permission from Texas Instruments Incorporated.
Copyright 2004 Texas Instruments Incorporated.